BM #1: RR SPIKE IN 14" CHERRY, 62' LEFT OF STA. 12+97.00 -L-
N 568534.60, E 960515.78 EL. 2127.02'

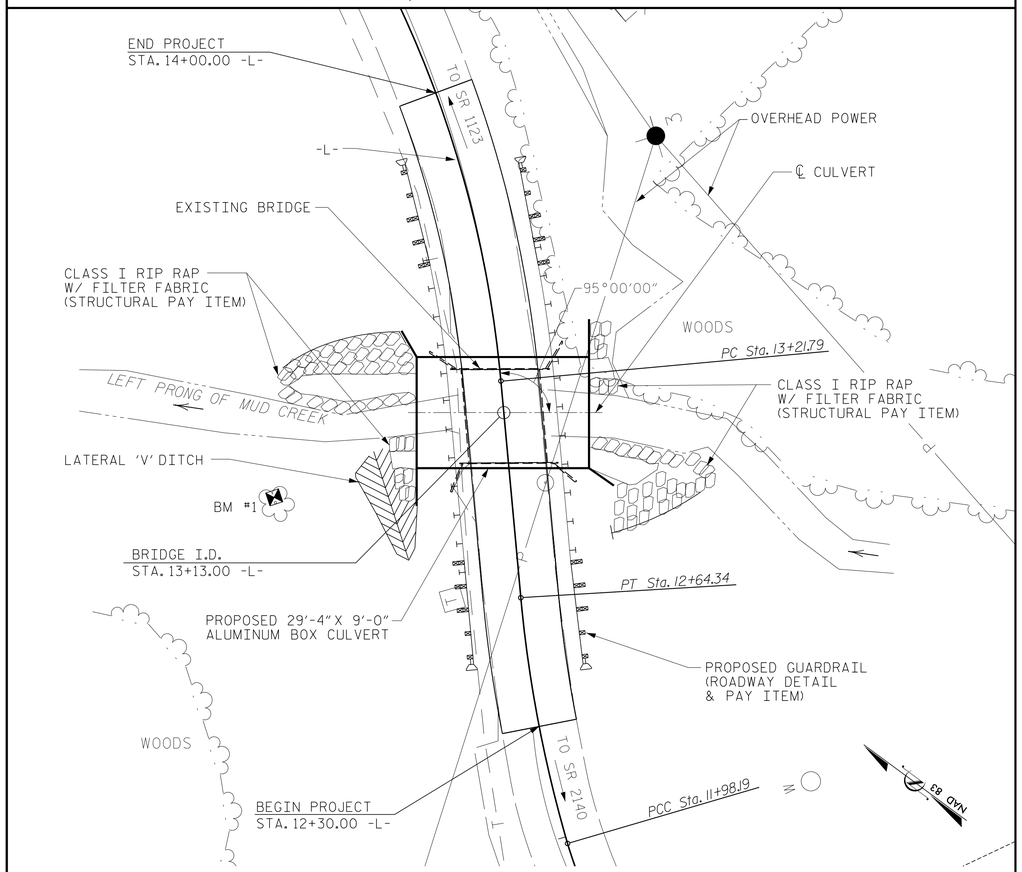

FOR UTILITY INFORMATION, SEE UTILITY PLANS AND SPECIAL PROVISIONS.

LOCATION SKETCH

NOTES

ASSUMED LIVE LOAD ----- HL-93 OR ALTERNATE LOADING.

DESIGN FILL ----- MAX. = 4.00' MIN. = 3.93'
FOR OTHER DESIGN DATA AND NOTES, SEE STANDARD NOTES SHEET.

THE RESIDENT ENGINEER SHALL CHECK THE LENGTH OF CULVERT BEFORE STAKING IT OUT TO MAKE CERTAIN THAT IT WILL PROPERLY TAKE CARE OF THE FILL.

FOR MAINTENANCE OF TRAFFIC, SEE TRAFFIC MANAGEMENT PLANS.

FOR FALSEWORK AND FORMWORK, SEE SPECIAL PROVISIONS.

FOR UTILITY INFORMATION, SEE UTILITY PLANS AND SPECIAL PROVISIONS.

FOR SUBMITTAL OF WORKING DRAWINGS, SEE SPECIAL PROVISIONS.

FOR CRANE SAFETY, SEE SPECIAL PROVISIONS.

FOR CULVERT DIVERSION DETAILS AND PAY ITEM, SEE EROSION CONTROL PLANS.

THE EXISTING STRUCTURE CONSISTING OF 1 SPAN @ 25'-6", WITH A CLEAR ROADWAY WIDTH OF 21.1 FT., WITH TIMBER DECK ON I-BEAMS AND TIMBER END BENTS WITH TIMBER CAPS ON TIMBER PILES, AND LOCATED .1 MI. W. OF JCT. SR 1123 SHALL BE REMOVED. SHOULD THE STRUCTURAL INTEGRITY OF THE BRIDGE DETERIORATE DURING CONSTRUCTION OF THE PROPOSED BRIDGE, A LOAD LIMIT MAY BE POSTED AND MAY BE REDUCED AS FOUND NECESSARY DURING THE LIFE OF THE PROJECT.

TEMPORARY SHORING MAY BE REQUIRED. SEE STANDARD ROADWAY DRAWING NO. 1801.01 FOR STANDARD TEMPORARY SHORING.

THE EXISTING BRIDGE INDICATED ON THE PLANS IS FROM THE BEST INFORMATION AVAILABLE. SINCE THIS INFORMATION IS SHOWN FOR THE CONVENIENCE OF THE CONTRACTOR, THE CONTRACTOR SHALL HAVE NO CLAIM WHATSOEVER AGAINST THE DEPARTMENT OF TRANSPORTATION FOR ANY DELAYS OR ADDITIONAL COST INCURRED BASED ON DIFFERENCES BETWEEN THE EXISTING BRIDGE SHOWN ON THE PLANS AND THE ACTUAL CONDITIONS AT THE PROJECT SITE.

REMOVAL OF THE EXISTING BRIDGE SHALL BE PERFORMED SO AS NOT TO ALLOW DEBRIS TO FALL INTO THE WATER. THE CONTRACTOR SHALL REMOVE THE BRIDGE AND SUBMIT PLANS FOR DEMOLITION IN ACCORDANCE WITH ARTICLE 402-2 OF THE STANDARD SPECIFICATIONS.

FOR ASBESTOS ASSESSMENT FOR BRIDGE DEMOLITION AND RENOVATION ACTIVITIES, SEE SPECIAL PROVISIONS.

EXCAVATE 1'-0" BELOW CULVERT AND FOOTING
AND REPLACE WITH FOUNDATION CONDITIONING MATERIAL IN ACCORDANCE WITH ARTICLE 414 OF THE STANDARD SPECIFICATIONS.

THE QUANTITY OF RIP RAP TO BE PAID FOR WILL BE THE ACTUAL NUMBER OF TONS OF EACH CLASS RIP RAP WHICH HAS BEEN INCORPORATED INTO THE COMPLETED AND ACCEPTED WORK. THE RIP RAP WILL BE MEASURED BY BEING WEIGHED ON TRUCKS ON CERTIFIED PLATFORM SCALES OR OTHER CERTIFIED WEIGHING DEVICES. THE QUANTITY OF RIP RAP WILL BE PAID FOR AT THE CONTRACT UNIT PRICE PER TON, "RIP RAP CLASS I".

ALUMINUM BOX CULVERT TO BE DESIGNED BY A NORTH CAROLINA REGISTERED ENGINEER IN ACCORDANCE WITH APPLICABLE PORTIONS OF STANDARD SPECIFICATIONS FOR HIGHWAY BRIDGES ADOPTED BY AASHTO. CONSTRUCTION SHALL MEET THE APPLICABLE SECTIONS OF THE NORTH CAROLINA DEPARTMENT OF TRANSPORTATION STANDARD SPECIFICATIONS FOR ROADS AND STRUCTURES.

NATIVE MATERIAL REMOVED FROM THE CHANNEL TO ALLOW FOR THE INSTALLATION OF THE CULVERT SHALL BE USED FOR BACKFILLING INSIDE THE CULVERT. SELECT BACKFILL SHALL BE INCLUDED IN THE CONTRACT PRICE BID FOR "CULVERT EXCAVATION."

ALUMINUM HEADWALLS AND WINGWALLS ARE DETAILED IN THESE PLANS, AND ARE TO BE INSTALLED PER THE MANUFACTURER'S RECOMMENDATIONS. HOWEVER, THE CONTRACTOR MAY ALTERNATELY CONSTRUCT REINFORCED CAST-IN-PLACE HEADWALLS AND WINGWALLS. IF THIS ALTERNATE IS CHOSEN, THE CONTRACTOR SHALL FURNISH DESIGN OF A PROFESSIONAL ENGINEER REGISTERED IN NORTH CAROLINA.

HYDRAULIC DATA

DESIGN DISCHARGE	= 790	CFS
DESIGN FREQUENCY	= 25	YRS
DESIGN HW ELEVATION	= 2122.9	FT
BASE DISCHARGE	= 1130	CFS
BASE FREQUENCY	= 100	YRS
BASE HW ELEVATION	= 2124.59	FT
OVERTOPPING DISCHARGE	= 1830	CFS
OVERTOPPING FREQUENCY	= 500 +	YRS
OVERTOPPING ELEVATION	= 2127.3	FT
DRAINAGE AREA	= 2.6	SQ. MI.
W.S. ELEVATION AT DATE OF SURVEY	UNKNOWN	

PI Sta 13+84.74
△ = 23° 52' 47.1" (LT)
D = 19° 14' 49.3"
L = 124.07'
T = 62.95'
R = 297.69'

HORIZONTAL CURVE DATA -L-

PI = 13+35.00
EL = 2,126.85'
VC = 110'

(-)1.1300% △ (+)0.8562%

GRADE DATA -L-

GRADE DATA

GRADE POINT ELEV. @ STA. 13+13.00 -L- = 2127.20'
BED ELEV. @ STA. 13+13.00 -L- = 2114.2' ±
ROADWAY SLOPES 2:1
ADT = 1200 VPD FOR YEAR 2031.

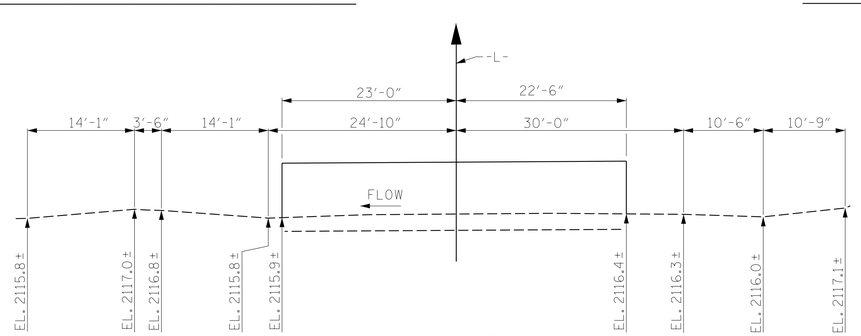

PROFILE ALONG ℄ CULVERT

TOTAL STRUCTURE QUANTITIES

ALUMINUM BOX CULVERT	LUMP SUM
REMOVAL OF EXISTING STRUCTURE, STA. 13+13	LUMP SUM
ASBESTOS ASSESSMENT	LUMP SUM
CULVERT EXCAVATION, STA. 13+13	LUMP SUM
FOUNDATION CONDITIONING MATERIAL, BOX CULVERT	94.1 TONS
CHANNEL SUBSTRATE MATERIAL	100 TONS
RIP RAP, CLASS I	38 TONS
GEOTEXTILE FOR DRAINAGE	124 SY
CLASS A CONCRETE (GUARDRAIL FOOTING)	6.6 CY
REINFORCING STEEL (GUARDRAIL FOOTING)	612 LBS

DOCUMENT NOT CONSIDERED FINAL UNLESS ALL SIGNATURES COMPLETED

NORTH CAROLINA PROFESSIONAL SEAL 20777 ENGINEER HARDY L. WILLIS
DocuSigned by: Hardy Willis
CC287CF6223463...
10/14/2016

V&M
Vaughn & Melton
Consulting Engineers
Asheville, North Carolina
828 253 2796
Charlotte, NC 704-357-0488
Boone, NC 828-355-9933
Tri-Cities, TN 423-467-8401
Knoxville, TN 865-546-5800
Spartanburg, SC 864-574-4775
Charleston, SC 843-974-5650
Middlesboro, KY 606-248-6600
Atlanta, GA 770-627-3509

Copyright © 2006 Vaughn & Melton, Inc. All Rights Reserved

DWN. BY: MAF DATE: 7/16
CHKD. BY: HLW DATE: 7/16

PROJECT NO. 14SP.20451.1
HENDERSON COUNTY
STATION: 13+13.00 -L-

SHEET 1 OF 4 REPLACES BRIDGE NO. 73

STATE OF NORTH CAROLINA
DEPARTMENT OF TRANSPORTATION
RALEIGH

29'-4" X 9'-0" ABC
95° SKEW
LEFT PRONG
OF MUD CREEK

REVISIONS								SHEET NO.
NO.	BY:	DATE:	NO.	BY:	DATE:			S-1
1			3					TOTAL SHEETS
2			4					4